REVISIONS		
ISS	ZONE	DESCRIPTION\PER REQUEST\DATE

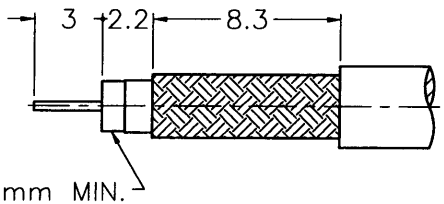

RECOMMENDED
CABLE STRIPPING DIM'S
(建議剝線尺寸)

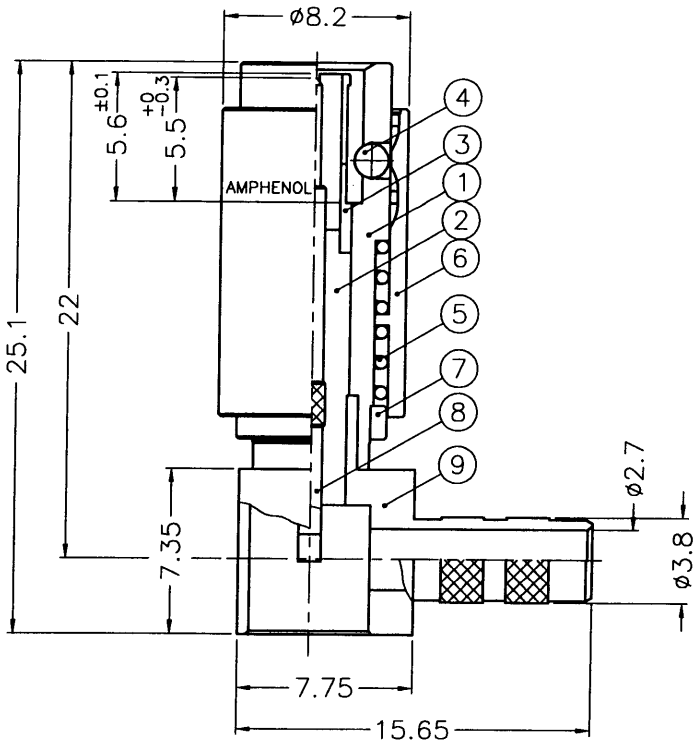

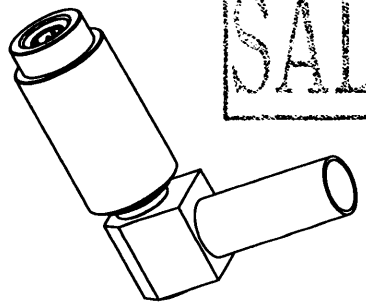

SCALE 1/2

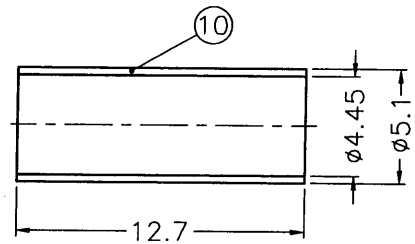

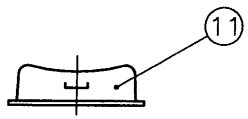

NOTES: FINISH (PLATING THICKNESS IN MICRO-INCHES)
1. BRASS
2. BERYLLIUM COPPER
3. NICKEL PL. 100 MIN. THICK OVER COPPER STRIKE
4. NICKEL PL. (100 MIN./160 MAX.) THICK OVER COPPER PL. (100 MIN./160 MAX.) THICK
5. GOLD PL. (4 MIN./8 MAX.) THICK OVER NICKEL PL. (80 MIN./120 MAX.) THICK
6. PTFE (TEFLON MIL-P-19468)
7. JIS H 3250, C 2600

1. CRIMPED FERRULE
HEX CRIMP SIZE .178"
2. CONTACT PIN TO SOLDER

SALES

ISSUED 2004. 6. 28 R&D

NO.	DESCRIPTION	MATERIAL	FINISH	Q'TY	DRAWING NO.
11	COVER	NOTE 1	NOTE 4	1	4G-731-01
10	FERRULE	NOTE 7	NOTE 3	1	FR-51/445X127
9	HOUSING	NOTE 1	NOTE 3	1	HS00ALJ03A
8	CONTACT PIN	NOTE 1	NOTE 5	1	4J-393-14
7	RING	NOTE 1	NOTE 4	1	4M-587-01
6	OUTER BODY	NOTE 1	NOTE 4	1	3D-601-02
5	SPRING	STAINLESS STEEL	NATURAL	2	4M-170-02
4	BALL	STAINLESS STEEL	NATURAL	3	4M-169-01
3	OUT CONTACT	NOTE 2	NOTE 5	1	4G-980-01
2	INSULATOR	NOTE 6	NATURAL	1	4G-744-12
1	BODY	NOTE 1	NOTE 4	1	3D-600-07

DIMENSIONS ARE IN MILLIMETERS

UNLESS OTHERWISE SPECIFIED TOLERANCES
0.5-6 = ±0.2
6-30 = ±0.4
30-120 = ±0.6
120-315 = ±1
315-1000 = ±1.6
1000-2000 = ±2.4

SCALE	3/1	ISSUE	A1

PART NO.

APPROVED Scott.H DATE 06-25-04'

CHECKED Paul.w DATE 06-25-04'

DRAWN Angela.W DATE 06-25-04'

FILE NO. F:\DWG\123\1112L3\FLEX3-75\N5GT5G

Amphenol
Danbury,CT,USA-Tainan,Taiwan-Shenzhen,China

TITLE 1.0/2.3 R/A CRIMP PLUG (FOR FLEX-3/75 CABLE)

DRAWING NO. 1231112L3-N/5GT5G-FLEX-3-75

ITEM NO. 101112AAK37LD7F

7/RD-DR 22018